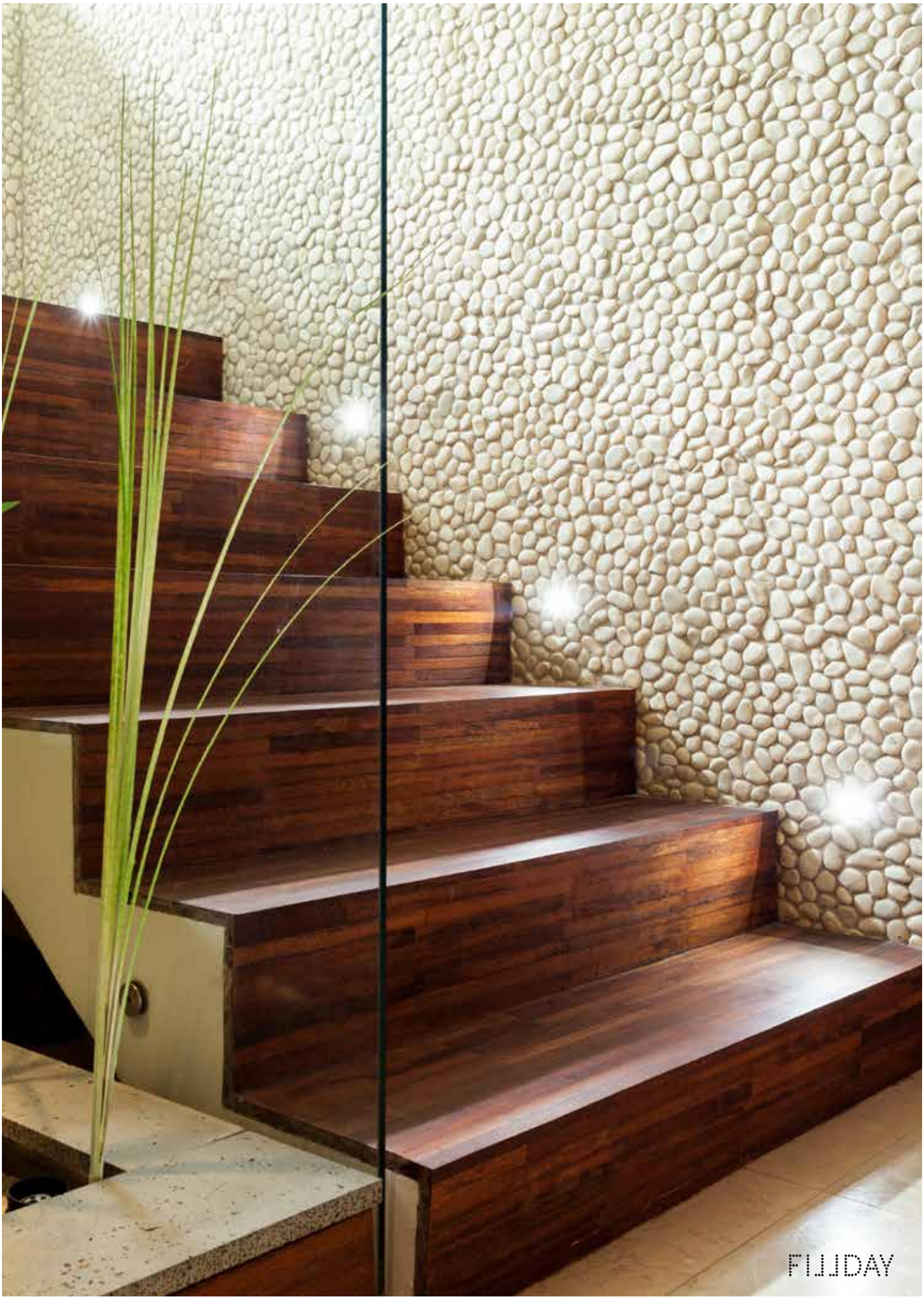

PAREDE SALIENTE E ENCASTRAR | WALL SURFACE AND RECESSED | MUR SAILLIE ET ENCASTRÉ | PARED SALIENTE Y EMPOTRADA

BEEP

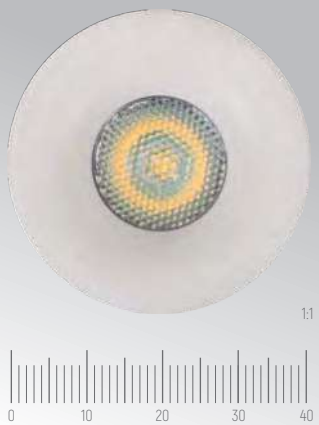

LED CREE LED chips inside UGR<19

Especificações | Specifications | Spécifications | Especificaciones

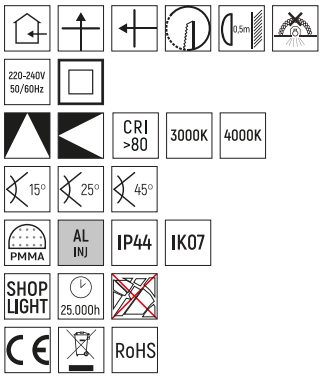

Standards

EN 60598-1
EN 60598-2-2
EN 62471
EN 62493
EN 55015
EN 61547
EN 61000-3-2
EN 61000-3-3

W

BEEP

1760750101C	LED	1,7W	3000K	15°	125Lm
1760750103C	LED	1,7W	4000K	15°	125Lm
1760750102C	LED	1,7W	3000K	25°	125Lm
1760750104C	LED	1,7W	4000K	25°	125Lm
1760750082C	LED	1,7W	3000K	45°	125Lm
1760750083C	LED	1,7W	4000K	45°	125Lm

K

BEEP

1760750105C	LED	1,7W	3000K	15°	125Lm
1760750107C	LED	1,7W	4000K	15°	125Lm
1760750106C	LED	1,7W	3000K	25°	125Lm
1760750108C	LED	1,7W	4000K	25°	125Lm
1760750109C	LED	1,7W	3000K	45°	125Lm
1760750110C	LED	1,7W	4000K	45°	125Lm

Dimensões | Dimensions | Dimensions | Dimensiones

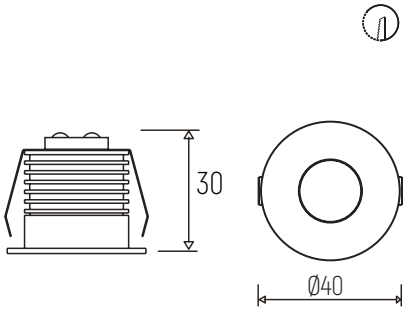

(mm)
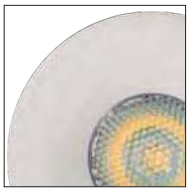
Outras Informações | Other Informations | Autres renseignements | Otras informaciones